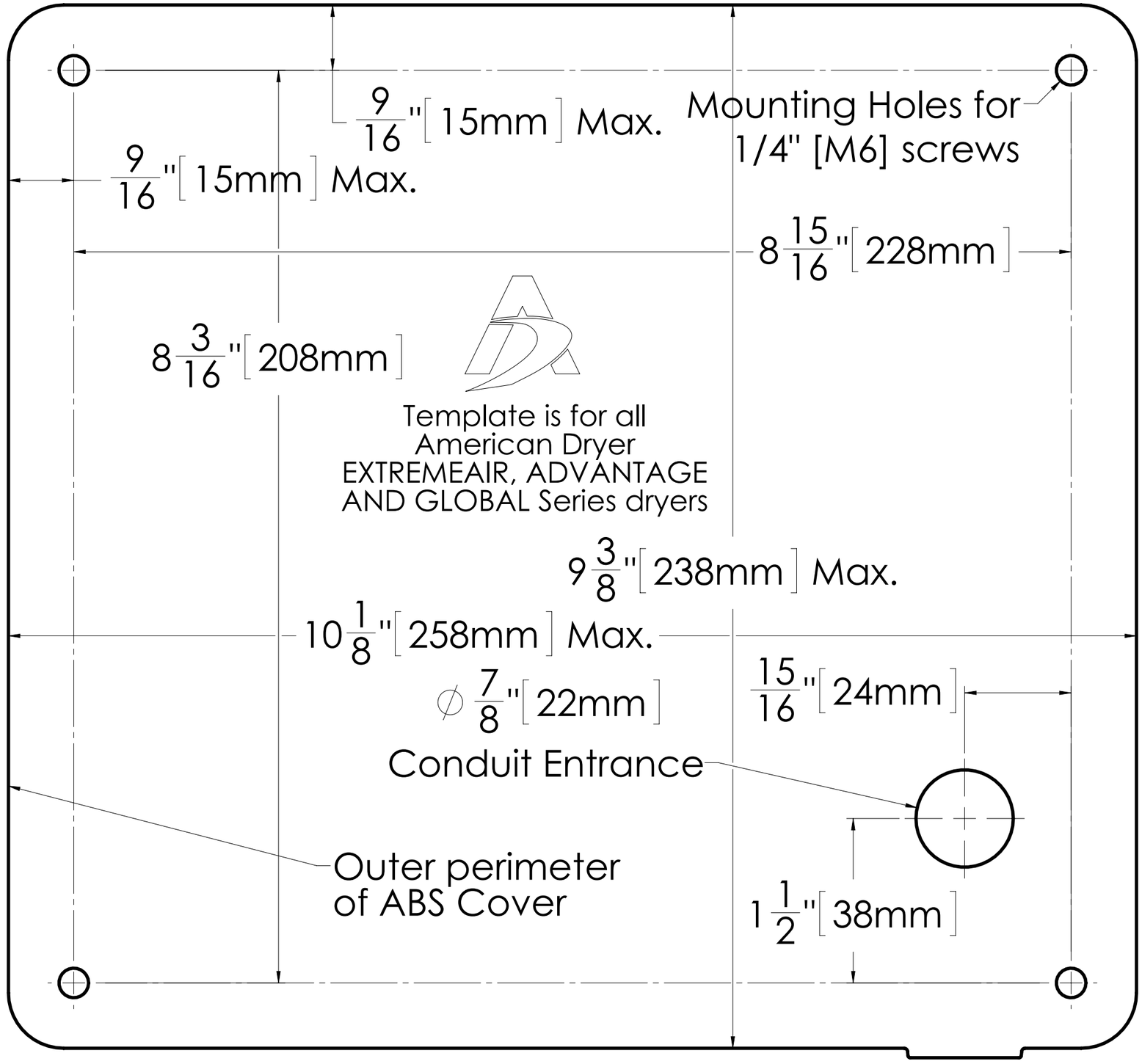

Revised 10/06/2014